[6]. Paul Sroufe, Santi Phithakkitnukoon, Ram Dantu, and João Cangussu , Email Shape Analysis for Spam Botnet Detection, Department of Computer Science & Engineering, University of North Texas, Denton, USA, 2009 IEEE

[7]. Kapil Singh Abhinav Srivastava Jonathon Giffin Wenke Lee, Evaluating Email's Feasibility for Botnet Command and Control, International Conference on Dependable Systems &Networks: Anchorage, Alaska, June 24-27 2008.

[8]. Kobkiat Saraubon Benchaphon Limthanmaphon, Fast Effective Botnet Spam Detection, Fourth International Conference on Computer Sciences and Convergence Information Technology, 2009.

[9]. Husain Husna, Santi Phithakkitnukoon,and Ram Dantu, Traffic Shaping of Spam Botnets, University of North Texas, Denton, USA, 2010.

[10]. Katsumi Ono, Isamu Kawaishi, Toshihiko Kamon, Trend of Botnet Activities, High-tech Crime Technology Division National Police Agency of Japan, 2007 IEEE

[11]. Keisuke TAKEMORI, Masahiko FUJINAGA, Toshiya SAYAMA, Masakatsu NISHIGAKI, Host-based traceback; Tracking bot and C&C server , KDDI R&D Laboratories Inc, Japan, 2009 ACM.

[12]. Moheeb Abu Rajab Jay Zarfoss Fabian Monrose Andreas Terzis, A Multifaceted Approach to Understanding the Botnet Phenomenon, Johns Hopkins University, Baltimore, Maryland, USA, 2006 ACM.

[13]. Gianluca Dini and Isidoro S. La Porta, BLOBOT: BLOcking BOTs at the Doorstep, Fourth International Multi-Conference on Computing in the Global Information Technology, 2009, Italy

[14]. J.Udhayan', R.Anitha, Demystifying and Rate Limiting ICMP hosted DoS/DDoS Flooding Attacks with Attack Productivity Analysis, 2009 IEEE International Advance Computing Conference , Patiala, India, 6-7 March 2009

[15]. Kazuya Kuwabara, Hiroaki Kikuchi, Masato Terada, Masashi Fujiwara, Heuristics for Detecting Botnet Coordinated Attacks, International Conference on Availability, Reliability and Security.

[16]. Basheer Al-Duwairi, G. Manimaran, and JUST-Google: A Search Engine-based Defense Against Botnet-based DDoS Attacks, Department of Electrical and Computer Engineering Iowa State University, USA, IEEE ICC 2009 proceedings.

[17]. Ricardo Villamarín-Salomón, José Carlos Brustoloni, Bayesian Bot Detection Based on DNS Traffic Similarity, University of Pittsburgh, Pittsburgh, USA, 2009 ACM.

[18]. Guofei Gu, Vinod Yegneswaran, Phillip Porras, Jennifer Stoll, Wenke Lee, Active Botnet Probing to Identify Obscure Command and Control Channels, Annual Computer Security Applications Conference

[19]. Binbin Wang, Zhitang Li, Hao Tu, Zhengbing Hu, Jun Hu, Actively Measuring Bots in Peer-to-Peer Networks, 2009 International Conference on Networks Security, Wireless Communications and Trusted Computing

[20]. Carlton R. Davis, Jos'e M. Fernandez, Stephen Neville, John McHugh, Sybil attacks as a mitigation strategy against the Storm botnet, ' Ecole Polytechnique de Montr'eal, University of Victoria, Dalhousie University, 2008 IEEE.

[21].Tony Bradley, "Essential Computer Security", Syngress 2006.

IMPROVE SMALL SIGNAL STABILITY IN SINGLE-MACHINE INFINITE-BUS WITH POWER SYSTEM STABILIZER

MOHAMMADREZA YOUSEFI, GHAZNFAR SHAHGHOLIAN
SEPEHR MOALEM
Department of Electrical Engineering, Najafabad Branch, Islamic Azad University, Esfahan, Iran

ABSTRACT
This paper presents a generalized small signal model for analysis and design of power system stabilizer (PSS) in single-machine infinite-bus (SMIB) system. Finally, the simulations results using Matlab verify the effectiveness of the controller proposed method on enhance power system stability by damping oscillations.

KEY WORDS
Power system stabilizer, small signal stability, eigenvalue analysis.

1. INTRODUCTION

Low frequency oscillation (LFO) of power system is one of the most important oscillations which greatly affect the stability of power system. LFOs are a common problem in large power systems, when systems are interconnected by relatively weak tie lines. These oscillations may sustain and grow to cause system separation if no adequate damping is available [1-3]. Damping of a power system oscillation is one of the main concerns in the power system operation since many years [4]. In order to damp power system oscillations and increase system oscillations stability, the installation of power system stabilizer (PSS) is both economical and effective. PSS is added to excitation systems to enhance the damping during low frequency oscillations [5]. The output of the PSS is applied as a supplementary control signal to the machine voltage regulator terminal [6]. Different control scheme for a PSS were proposed. These techniques may be classified in to three groups: linear control based on linearization of the system about an operating point such as adaptive controller, nonlinear control such as state feedback controller, variable structure controller, extended integral controller and robust controller, and empirical control based on heuristic methods such as fuzzy logic controller, genetic algorithms and synergetic control [7, 8].

A PSS design scheme based on robust decentralized output feedback sliding mode control technique on a multi-machine power system with used linearized model of the nonlinear equations proposed in [9] and compare it with classical PSS design. In [10] the dynamic characteristics of the proposed PSS based on synergetic control theory are studied in a typical single-machine infinite-bus power system and compared with the cases with a conventional PSS and without a PSS.

In this paper the effects of PSS on the stability of power system is presented. The analysis is base on bifurcation theory, small signal stability evaluation and time domain simulations. Finally, the simulation results show the effectiveness and robustness of proposed controller to enhance power system stability by damping oscillations.

2. SYSTEM DESCRIPTION

The system model for excitation control design and stability analysis is usually that of a single generator infinite-bus system. Fig. 1 shows the schematic of single machine connected to a large system through transmission line. The dynamic of the generator is expressed in terms of the electromechanical swing equation and the internal voltage equation.

In most modern systems the AVR is a controller that senses the generator output voltage then initiates corrective action by changing the exciter control in the desired direction. There is a variety of different excitation types. The IEEE type-1 excitation is considered in this paper. Fig. 2 block diagram representation of SMIB with exciter and AVR [12], where T_A and K_A are time constant and gain of the voltage regulator, T_F and K_F are time constant and gain of the stabilizer of the excitation system and E_F is corresponding to the generator internal voltage. The voltage error ΔU_E is the difference between the reference voltage ΔU_R and the terminal voltage ΔU_T. The transfer function of the exciter is given by:

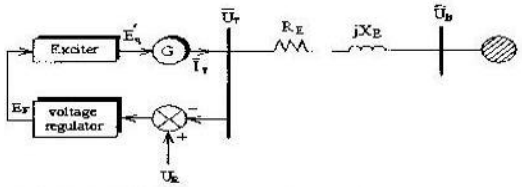

Fig.1. A SMIB system with exciter and AVR

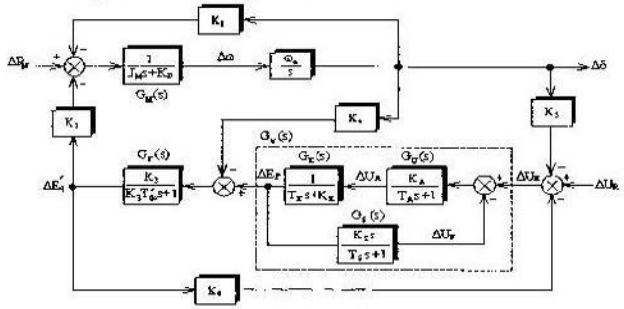

Fig.2. Block diagram of SMIB with exciter and AVR

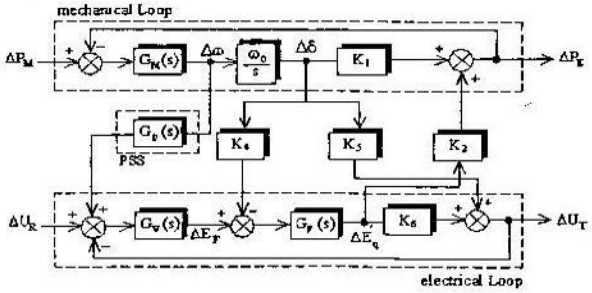

Fig.3. Block diagram of SMIB with PSS

$$G_V(s) = \frac{\Delta E_F(s)}{\Delta U_E(s)} = \frac{G_U(s)G_E(s)}{1+G_S(s)G_U(s)G_E(s)} \tag{1}$$

3. POWER SYSTEM STABILIZER

PSS are widely used through the excitation system of generator to improve the stability of power system. The basic function of a PSS is to add damping to the electromechanical oscillations by controlling its excitation using auxiliary stabilizing signals. The block diagram model of the SMIB system with AVR and exciter include effect of PSS shows in Fig. 3. The equations of the PSS with one lead-lag networks and two constant T_1 and T_2 can be written as:

$$\frac{d}{dt}\Delta U_W = -\frac{K_P K_1}{J_M}\Delta\delta - \frac{K_P K_D}{J_M}\Delta\omega - \frac{K_P K_2}{J_M}\Delta E'_q - \frac{1}{T_W}\Delta U_W + \frac{K_P}{J_M}\Delta P_M \tag{2}$$

$$\frac{d}{dt}\Delta U_P = -\frac{K_P K_1 T_1}{J_M T_2}\Delta\delta - \frac{K_P K_D T_1}{J_M T_2}\Delta\omega - \frac{T_1 K_P K_2}{J_M T_2}\Delta E'_q + \left(\frac{1}{T_2} - \frac{T_1}{T_2 T_W}\right)\Delta U_W - \frac{1}{T_2}\Delta U_P + \frac{K_P T_1}{J_M T_2}\Delta P_M \tag{3}$$

The transfer function of a system represents the relationship describing the dynamics of the system under consideration. The output electrical power of the machine can dynamically be controlled to improve the dynamic performance of the system. The deviation of electromechanical is:

$$\Delta T_E = \underbrace{K_1\Delta\delta}_{\Delta T_{E1}} + \underbrace{K_2\Delta E'_q}_{\Delta T_{E2}} \tag{4}$$

where ΔT_{E1} is change in T_E with the change in δ for E'_q constant and ΔT_{E2} is change in T_E with change in E'_q when δ is constant. By using the block diagram of the SMIB with PSS, ΔT_{E2} is given by:

$$\Delta T_{E2}(s) = \underbrace{\frac{K_2 G_F(s) G_V(s)}{1+K_6 G_F(s) G_V(s)}}_{H_F(s)}\Delta U_S(s) - \underbrace{\frac{\omega_o K_2 G_F(s)[K_4 + K_5 G_V(s)]}{s[1+K_6 G_F(s) G_V(s)]}}_{H_S(s)}\Delta\omega(s) \tag{5}$$

4. SIMULATION RESULTS

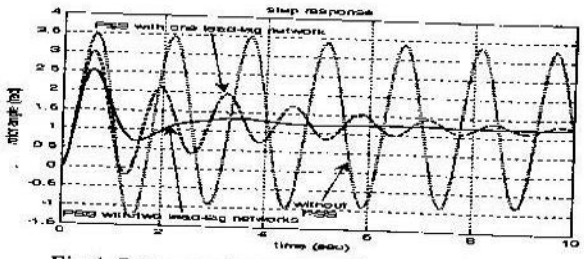

Fig.4. Rotor angle response for normal loading

Digital simulation is carried out by the MATLAB software. For the simulation, different loading conditions with change of parameters in the SMIB system are considered. The block diagram of SMIB equipped with PSS shown in Fig. 4.

The system eigenvalues with and without the proposed stabilizer for nominal and light loading conditions are given in Table I, which shows the electrometrical mode eigenvalue with its damping ratio for the open loop system without and with PSS. This base system has a low damped electromechanical mode and needs to be stabilized. The damping of the electromechanical is improved as it changes from 0.0027 to 0.0654 with one lead-lag network and to 0.3664 with two lead-lag networks. The rotor angle and electrical power response at nominal operating condition are shown in Figs. 5 and 6. Fig. 7 present Bode diagram of the transfer function [$T_C(s)$] for various current and voltage loops gains. It can be observed that proposed instantaneous low pass filter, current and voltage controller ensures wide frequency bandwidth for output voltage regulation.

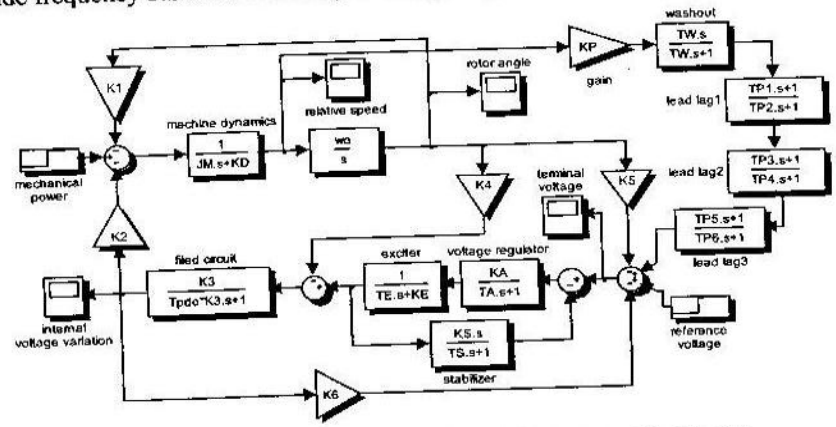

Fig.5. Block diagram of SMIB with PSS simulated in Matlab

TABLE I. SYSTEM EIGENVALUES WITH AND WITHOUT PSS OF NOMINAL LOADING

State variable	System mode with normal load			System mode with light load		
	Without PSS	With one lead-lag network	With two lead-lag networks	Without PSS	With one lead-lag network	With two lead-lag networks
δ, ω	-0.0116±j4.2232 η=0.0027	-0.3183±j 4.8539 η=0.0654	-1.6106±j4.1034 η=0.3664	0.2627±j5.4388 η=0.0482	-0.3574±j 5.9581 η=0.0599	-1.8824±j5.8137 η=0.3080
E'_q, E_f	-0.9318±j1.8480	-0.7715±j1.7546	-0.7027±j1.8733	0.6720±j1.5483	-0.6229±j1.4877	-0.5947±j1.5224
U_A, U_F	10.4202±j10.3084	11.0812±j10.0021	18.7813±j7.5515	-10.4290±j 10.2727	11.0210±j10.0262	18.3590±j7.1725
U_W U_r U_s	———	-0.3370 , -8.3816	-0.3365 -5.2675±j 8.6177	———	-0.3363 , -8.7218	-0.3359 -5.5263±j 7.8836

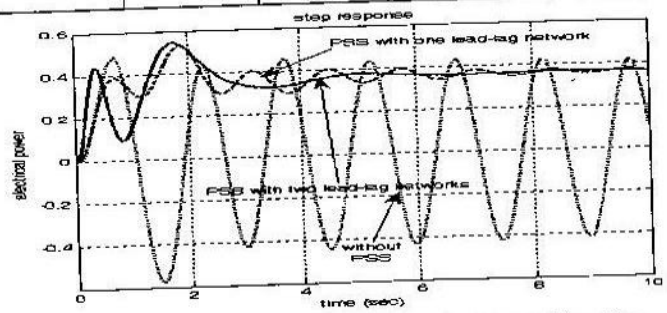

Fig.6. Electrical power response for normal loading

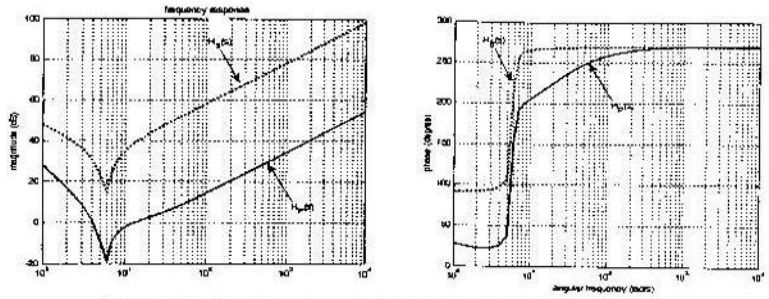

Fig.7. Bode plot of control to output transfer function

5. SUMMARIES

Low frequency oscillations occur frequently due to disturbances such as changes in loading conditions or a loss of a transmission line or a generator unit. The oscillations in a power system generally occur due to the lack of damping torque at the generator rotor. Power system stabilizer is used for oscillation damping in power system. In this paper the small signal stability performance of a single machine connected to a large system through transmission lines is presented.

REFERENCES

[1] M.R.S. Tirtashi, K. Mazlumi, M. Sadeghi, "TCPS controller design using PSO and chaos algorithm to damping the power system oscillations", IEEE/ECTI-CON, pp.1191-1195, Chaing Mai, May 2010.

[2] K. Prasertwong, N. Mithulananthan, "Conventional and fuzzy logic controllers at generator location for low frequency oscillation damping", Int. Jou. of Elc. Pow. and Ene. Sys. Eng., pp.136-144, 2009.

[3] S. Panda, N.P. Padhy, "A PSO based SSSC controller for improvement of transient stability performance", Int. Jou. of Int. Sys. And Tec., pp.28-35, Winter 2007.

[4] G. Shahgholian, J. Faiz, "The effect of power system stabilizer on small signal stability in single-machine infinite-bus", Inter. Jour. of Elect. And Engi., 4(2), pp.45-53, 2010.

[5] M.Bouhamida, M.A.Denai, "Robust stabilizer of electric power generator using H_∞ with placement constraints", Jour. of Elect. Engi., Vol. 56, No.7-8, pp.176-182, 2005.

[6] A. Shoulaie, M. Bayati-Poudeh, G. Shahgholian, "Damping torsional torques in turbine generator shaft by novel PSS based on genetic algorithm and fuzzy logic", Jour. of Trans. on Elec. Tech. (JTET), Vol.1, No.1, pp.3-10, Winter 2009.

[7] A.C. Padoan, B. Kawkabani, A. Schwery, C. Ramirez, C. Nicolet, J.J. Simond, F. Avellan, "Dynamical behavior comparison between variable speed and synchronous machines with PSS", IEEE Trans. on Pow. Sys., Vol.25, No.3, pp.1555-1565, Aug. 2010.

[8] A. Hasanovic, A. Feliachi, A. Hasanovic, N.B. Bhatt, A.G. Degroff, "Pratical robust PSS design through identification of low order transfer functions", IEEE Trans. On Pow. Syst., Vol.19, No.3, pp.1492-1581, August 2004.

[9] Z. Jiang, "Design of a nonlinear power system stabilizer using synergetic control theory", Elec. Pow. Sys. Res., Vol.79, No.6, pp/855-862, June 2009.

[10] W. H. jun, Z. Hui, "A Self-Organizing Fuzzy Power System Stabilizer Based on Slide Mode Control", IEEE/ICMTMA, Vol.1, pp.335-338, Changsha, Mar. 2010.

[11] S.I. Safie, M. MdShah, A.R. Hasimah, A. Wahab, H.M. Yusri, "Sliding mode control power system stabilizer for single machine connected to infinite bus", IEEE/PECON, pp.122-126, December 2008.